BACKSAFE australia

1300 305 314

# Assembly Instructions

## STURGO® Platform Trolley - Model 12420009

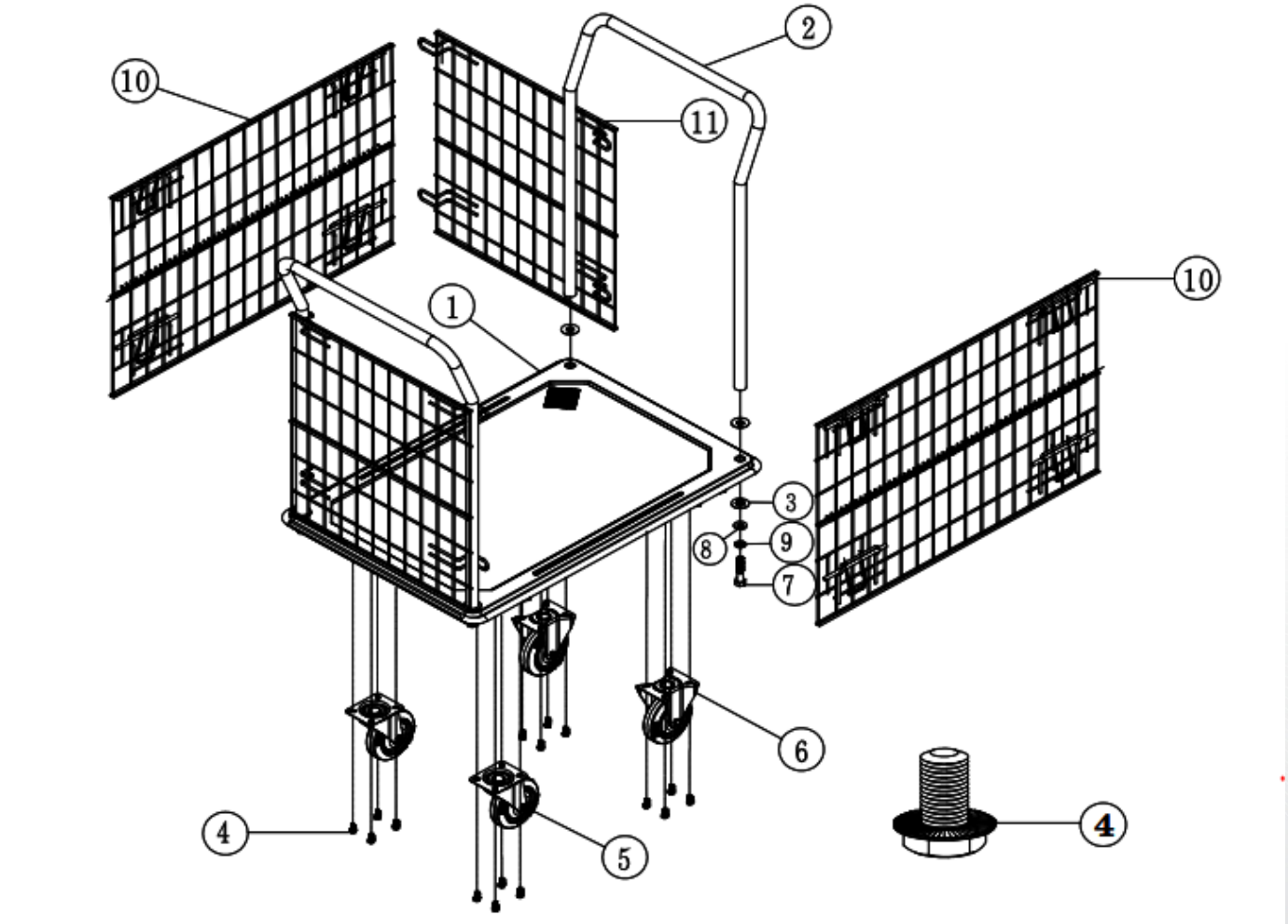


| NO. | DESCRIPTION | QTY |
|---|---|---|
| 1 | PLATFORM | 1 |
| 2 | HANDLE | 2 |
| 3 | WASHER SUPPORT | 8 |
| 4 | BOLT FLANGE | 16 |
| 5 | SWIVEL CASTER | 2 |
| 6 | FIXED CASTER | 2 |
| 7 | BOLT | 4 |
| 8 | WASHER | 4 |
| 9 | SPRING WASHER | 4 |
| 10 | MESS SURROUND | 2 |
| 11 | MESS SURROUND | 2 |